Datasheet
solids - Rotary Valve
SRVS - Hygienic-Wet

solids solutions
Part of HOSOKAWA ALPINE

Operating conditions:

Maximum pressure: 0,7 bar absolute up to <1,5 bar g. Maximum product temperature: 150° C
Bulk solid data:
Powder form, up to medium hardness, free flowing up to limited flowing products
Option 16: protective system, type SRVS1, shock pressure proof P_{red} 1 bar and flame propagation proof

Type	Inlet / Outlet-Ø *)	Height	Volume / Round	Weight
SRVS1505Y01A	150 mm	320 mm	5 dm^3	125 kg
SRVS2009Y01A	200 mm	375 mm	9,5 dm^3	160 kg
SRVS2519Y01B	250 mm	450 mm	19 dm^3	210 kg

*) Flange-outside-Ø and holes acc. to PN10 DIN2576

Basical version:

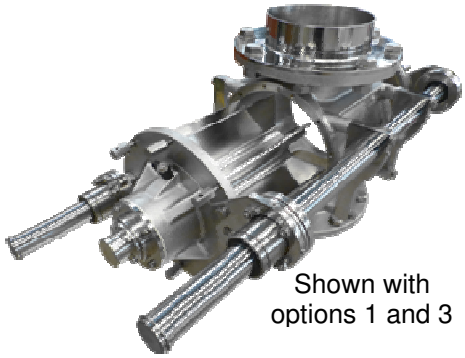
Shown with options 1 and 3

According to EHEDG-guidelines type EL-Class II, machinery directive 2006/42/EC, DIN EN ISO 14159 (hygienic requirements), DIN EN 1672-2 (food machinery) and GMP/FDA-requirements.

Housing: casted stainless steel 1.4408 (DIN) / CF-8M (AISI)

Rotor: welding construction – stainless steel 1.4307 (DIN) / 304L (AISI). 8 rounded pockets, removable rotor without leading rails.

Outside bearings.

Shaft seal: radial shaft sealing rings FDA-approved with sealing/purge air connection.

Pneumatic installation for sealing / purge air, consisting of 2/2-way solenoid valve, pressure regulator and nozzles.

Hygienic design for food, pharma, cosmetics, chemistry.

Easy to dismantle, easy to clean, free of dead zones and free of gaps, possibility to CIP cleaning.

Parts in contact with product (inside) surface quality Ra < 0,8 µm. Weldings free of gaps and scattered Ra < 0,8 µm. Angles and edges with wide radius.

Gap-free connection between housing and bearing shield

Suitable for zone 20 inside category 1 acc. ATEX 2014/34/EU.

With type examination test by a notified body.

With water pressure test of the housing with bearing shields.

Drive: direct.
Motor: three-phase gearboxmotor, manufacturer: SEW, separately specified.
Form: slip on gear with torque arm.


Rotor with rounded pockets:

approval:	MIGSA		SST	
	Date: 06.04.20	sign: Ru	Date: 6.4.20	Sign: Le

Preliminary
Modifications reserved

solids solutions group
www.solids.eu

- Bearing of the rotor in the shield with bearing bushings (1).

  Advantage:

  When pulling the rotor out the sealings remain intact, because the bearing bushing stay in the shield.

- Double bearing (2) of the rotor shaft in the bearing bushing.

  Advantage:

  Exact radial fixing and absorbing of high bending moments due to pressure differences.

- Sealing of the bearing and the rotor shaft against the product zone by use of a co-rotating seal disc (3) and a circular flushing chamber (4) with purge air / gas.

  Advantage:
  The area of the bearing need not to be cleaned during CIP-cleaning. The purge air / gas prevents the entry of the cleaning fluid into the area of the bearing.

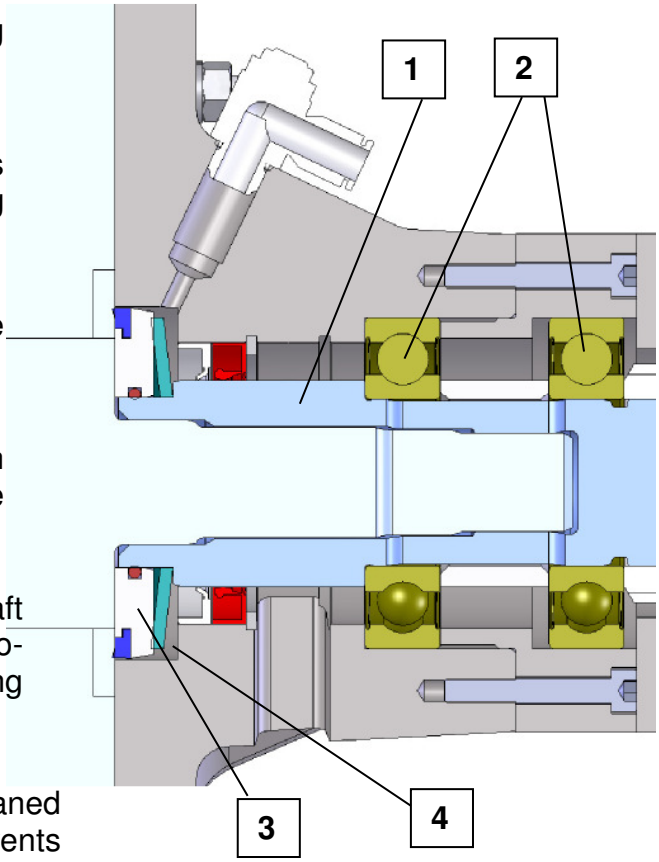

- Axial centering device with adjustable screw socket and fixed stop (5).
- Axial free of clearance rotor bearing by use of suitable ball bearings (6) and axial fixing of the bearing bushing.
- Fixing of the rotor with only one bolt (7).

  Advantage:

  Simple and time saving disassembly and assembly of the rotor without adjustment of the gap between rotor and housing.

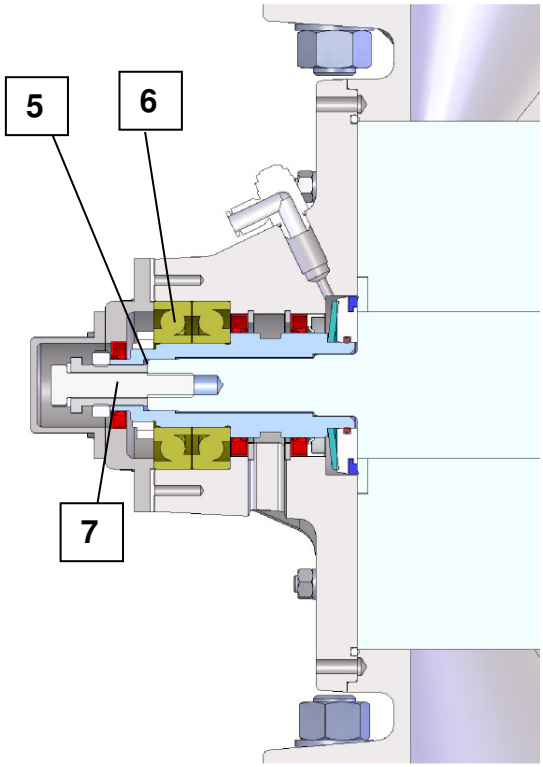

Wet cleaning CIP

1. Rotor remains assembled.
2. Washing the valve with cleaning liquid when the rotor is rotating and purge of the shaft throughput with compressed air.
3. Drying, analog washing.
4. If necessary after the CIP-cleaning the rotor will be pulled out and the cleanness of the critical points will be checked and secondary cleand. During validation of the CIP-cleaning the additional actions (inspection, cleaning) will be defined.
5. Rotor push in again.

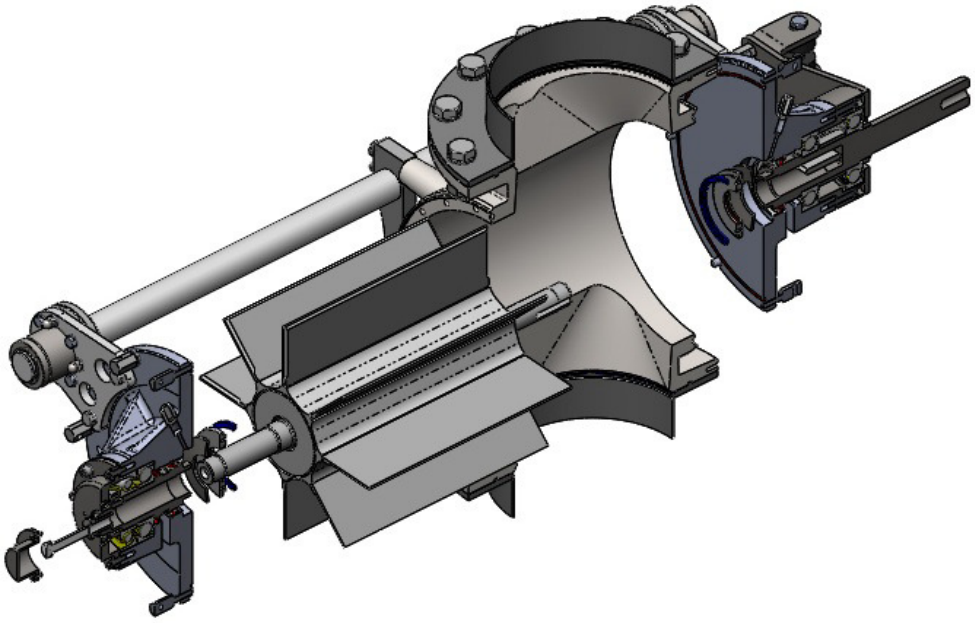

Options:

1. Pull out device with leading rails.

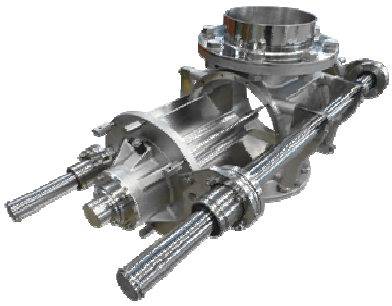

2. Electropolished, incl. leakage air collector/ granule inlet/ blowing shoe.
3. Inlet and outlet with centering flange and connection pipe plain, made of stainless steel 1.4307 DIN) / 304L (AISI). Hygienic-design. In contact with product, inside, surface quality Ra < 0,8 µm, outside < 3,0 µm. Incl. connection parts for assembling.

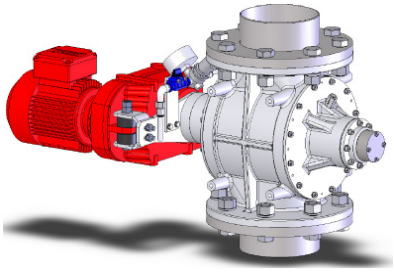

4. Granule inlet for grain size > 500 µm cubic up to 10 mm, made of stainless steel 1.4307 DIN) / 304L (AISI).

Hygienic-design. In contact with product, inside, surface quality Ra < 0,8 µm, outside < 3,0 µm. Incl. connection parts for assembling.

5. Leakage air collector with granule inlet made of stainless steel 1.4307 DIN) / 304L (AISI).

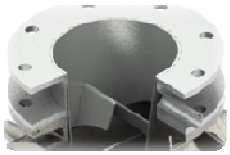

Hygienic-design. In contact with product, inside, surface quality Ra < 0,8 µm, outside < 3,0 µm. Incl. connection parts for assembling.

6. Leakage air collector for powders made of stainless steel 1.4307 DIN) / 304L (AISI).

Hygienic-design. In contact with product, inside, surface quality Ra < 0,8 µm, outside < 3,0 µm. Incl. connection parts for assembling.

7. Blowing shoe for pneumatic conveying made of stainless steel 1.4307 DIN) / 304L (AISI).

Hygienic-design. In contact with product, inside, surface quality Ra < 0,8 µm, outside < 3,0 µm. Pipeline connection without flange. Incl. connection parts for assembling.

8. Casted parts made of 1.4408 (DIN) / CF-8M (AISI), rest 1.4404 (DIN) / 316L (AISI), incl. leakage air collector/ granule inlet/ blowing shoe.
9. Casted parts made of 1.4408 (DIN) / CF-8M (AISI), rest 1.4571 (DIN) / 316Ti (AISI), incl. leakage air collector/ granule inlet/ blowing shoe.

10. Standstill monitoring with star and sensor

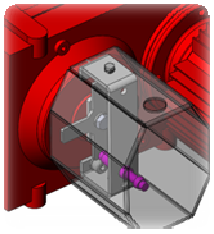

11. Blowing shoe for pneumatic conveying made of stainless steel 1.4307 (DIN) / 304L (AISI). Pressure shock resistant. Hygienic-design. In contact with product, inside, surface quality Ra < 0,8 µm, outside < 3,0 µm. Pipeline connection with clamp. Incl. connection parts for assembling.
12. Pneumatic discharge of the pockets for cohesive products, incl. pneumatic installation.

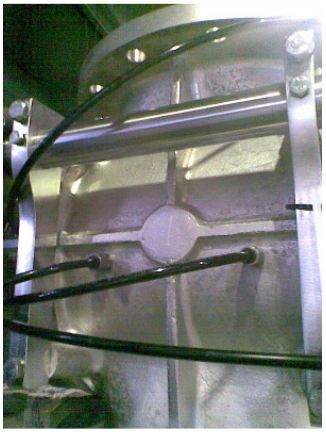

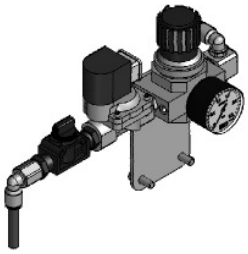

13. Dosing-stop by switching-off-positioning of the rotor with 8-finger-star and sensor

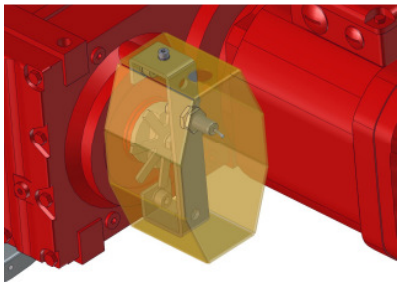

14. Electrical parts outside, suitable for zone 2/22.
15. Electrical parts outside, suitable for zone 1/21.
16. **Protective system, type SRVS1, shock pressure proof P_{red} 1 bar and flame propagation proof. Up to 20 turn/min. Data like table of the basical version, rotor like described in the basical version, not for metal dusts. Certificate number FTZÚ 18 ATEX 0126X.**
17. **Nitriding** thermic treatment by absorption for wear protection in housing, caps and rotor. Penetrates until 50 µm. Obtained hardness: between 600 and 1000 HV.

Related documents:

3D-Part: Type.step (example : **SRVS15005Y01.** Step)
2D-planning drawing: Type.dxf (example: **SRVS15005Y01.** dxf)
Selection criteria: SG- ZRS-SRV-DBS
Pricelist: PL-SRVS-Hygienic
List of drawing numbers: Draw-No-List_SRVS-Hygienic