Datasheet
solids – Single Segment Locking Valve
BPP-S - Heavy

Locking, valve for granular products for mining sector, sand, gravel and concrete, chemical sector, environmental sector.

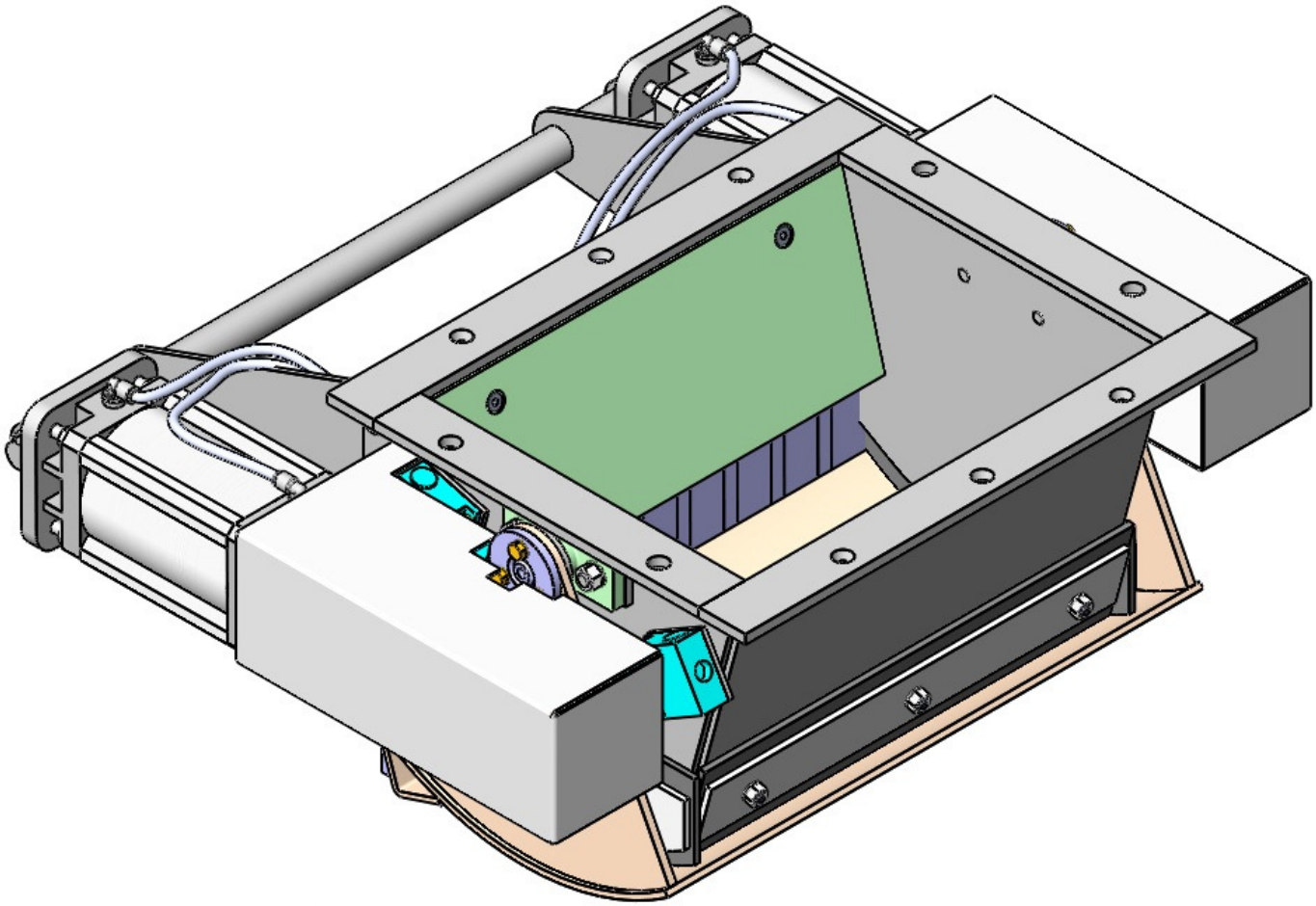

Advantages:

- **Robust design**
- **Locking device suitable for granulates until 100mm grain size**
- **Dust tight**
- **Abrasion resistant**
- **Application variety**

approval	MIGSA		SST		SSG	
	Date:	sign:	Date: 3.2.2020	sign: Bö	Date:	sign:

Preliminary
Modifications reserved

solids solutions group
www.solids.eu

Operation conditions:

Product max. temperature: 80 °C
Max. / min. ambient temperature: -10 °C ≤ T ≤ 50 °C (80°C without solenoid valve)
Bulk solid data:

Particle size: grains from 7 to 100mm (for smaller size grains see option 2), up to middle hardness.
Fluidity: from free flowing up to limited flowing products.

Type	Inlet dimensions (mm)	Outlet dimensions (mm)	Permitted grain size (mm)	Height (mm)	Weight (kg)
BPPS350300H01	350 x 300	205 x 300	7 - 40	322	78
BPPS350450H01	350 x 450	205 x 450	7 - 70	322	103
BPPS550500H01	550 x 500	340 x 500	7 - 70	504	205
BPPS550700H01	550 x 700	340 x 700	7 - 100	504	233

The device described below does not have any source of ignition. Therefore, it does not apply the ATEX Directive 2014/34/EU and are authorized to contain potentially explosive atmospheres (zones 20-21-22) inside. According to the guide of the ATEX Directive 2014/34/EU, it should not be marked on the plate.
The electrical equipment must be specified separately and duly certified for the corresponding ATEX zone.

Basical version:

Manufactured with carbon steel, welded construction.

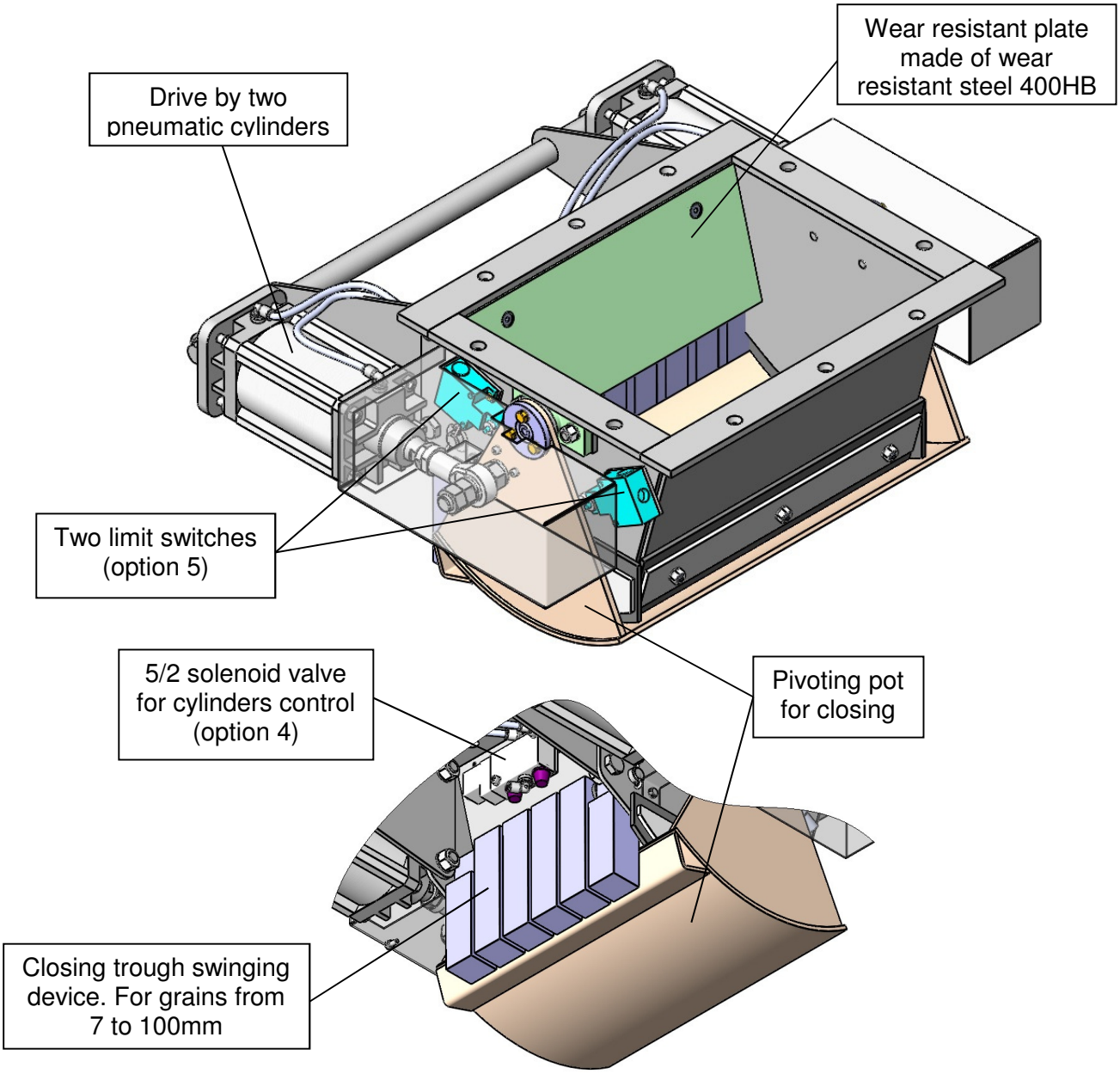

Surface treatment:

Chemical descaling, base painting 40µm zinc-phosphate, final painting 40 µm 2 components polyurethane, RAL5012 Azul.

Electric parts and sensors:

	Denomination	Manufacturer	Type
BPPS001 (option 4)	Solenoid valve 5/2	Norgren-Herion	2623000.3052
BPPS002 (option 5)	Limit switch	Telemecanique	XCK-M115
BPPS002 (option 6)	Magnetic detector	SMC	D-M9BL
BPPS002 (option 7)	Inductive detector	PEPPERL+FUCHS	NBN4-12GM50-E2

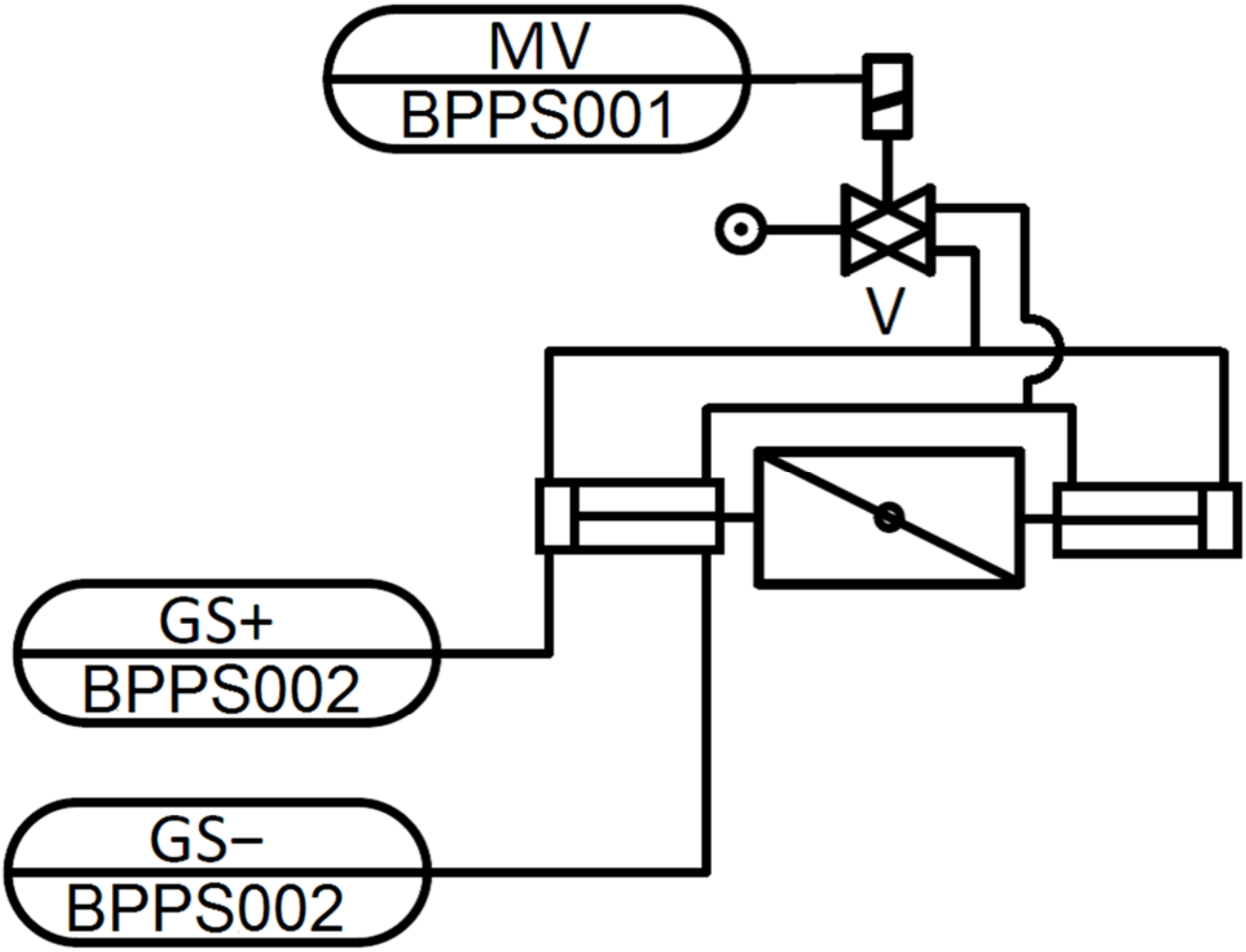

Options:

1. Parts in contact with the product manufactured in:
   1.1. Stainless steel 1.4307 (DIN) / 304L (AISI).
   1.2. Stainless steel 1.4404 (DIN) / 316L (AISI).
2. Closing by rubber sheet for small grains, from 0 to 7mm.

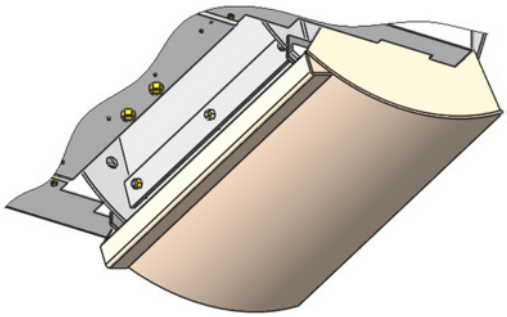

3. Emergency closing with a shear plate.

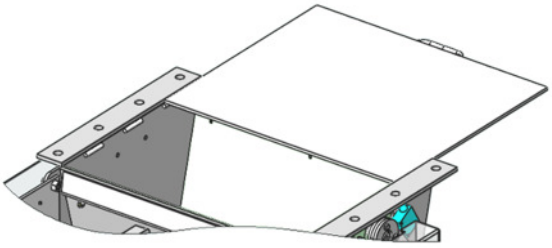

4. With 5/2 solenoid valve.
5. With limit switches.
6. With magnetic detectors.

7. With inductive detectors.

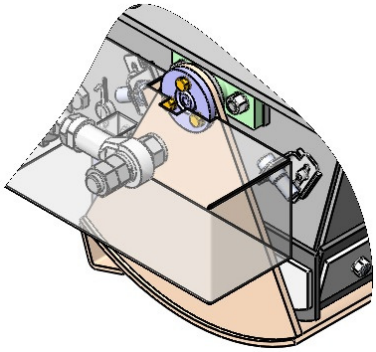

8. Electrical parts outside for zone 2/22.
9. Electrical parts outside for zone 1/21.
10. Minimum ambient temperature: -20ºC.

Associated documents:

3D-Part: Ref.step (e.g.: **BPPS350300H01**.Step)
2D layout drawing: Ref.dxf (e.g.: **BPPS350300H01**.dxf)
Selection guide: SG-BPP-S
Price list: PL-BPP-S-Heavy
List of drawing numbers: Draw-No-List_ BPP-S-Heavy